1. SPECIFICATION

AZ-2434S-PD

ITEM		UNITS	SPECIFICATIONS	CONDITIONS
01	Rated Voltage	V	12	VDC
02	Operating Voltage	V	3~ 20	
03	Rated Current	mA(Max)	10	Rated Voltage
04	Sound pressure level (Distance at 10cm)	dBA(Min)	95	Rated Voltage Rated Frequency
05	Rated Frequency	Hz	3400	Rated Voltage
06	Resonant Frequency	Hz	3400± 500	

AATC

REV NO.	REVISION NOTE	APPROVAL	DATE

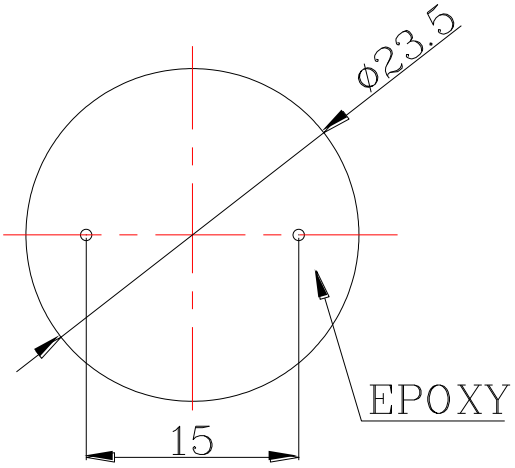

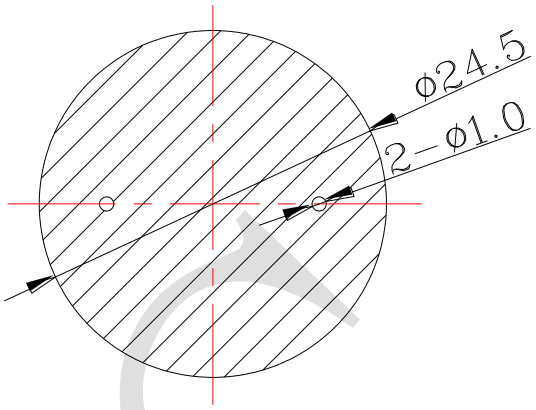

RECOMMEND PCB LAYOUT

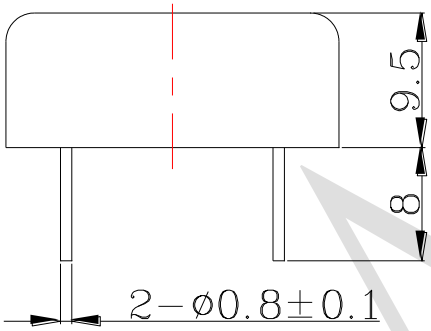

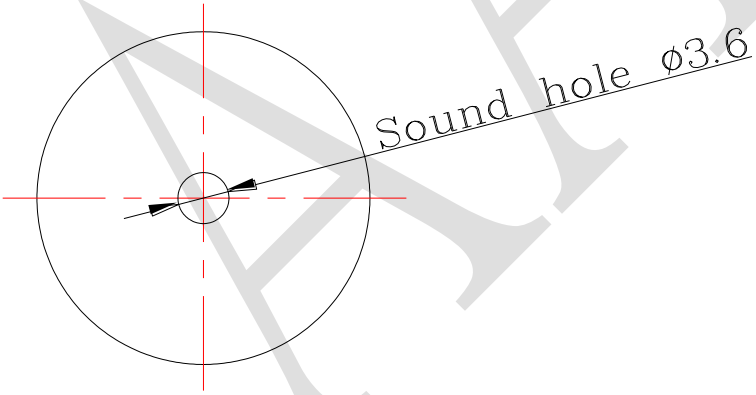

RoHS

TITLE: PIEZO BUZZER	DRAWN: Jerry 2014/05/16	SCALE: 2:1	SHEET: 1 of 1
PART NO. AZ−2434S−PD	DESIGNED: R & D OF AAT	UNITS: mm	
	CHECKED:	TOLERANCE ± 0.5	
DWG NO. UGPM24AX3412P	APPROVAL:	UNLESS OTHERWISE SPECIFIED: ONE PLACE DECIMAL ± *** TWO PLACE DECIMAL ± *** THREE PLACE DECIMAL ± ***	
REV 2	MATERIAL: MPPO		

ADVANCED ACOUSTIC TECHNOLOGY CORPORATION

For more information, please contact AATC.

AATC